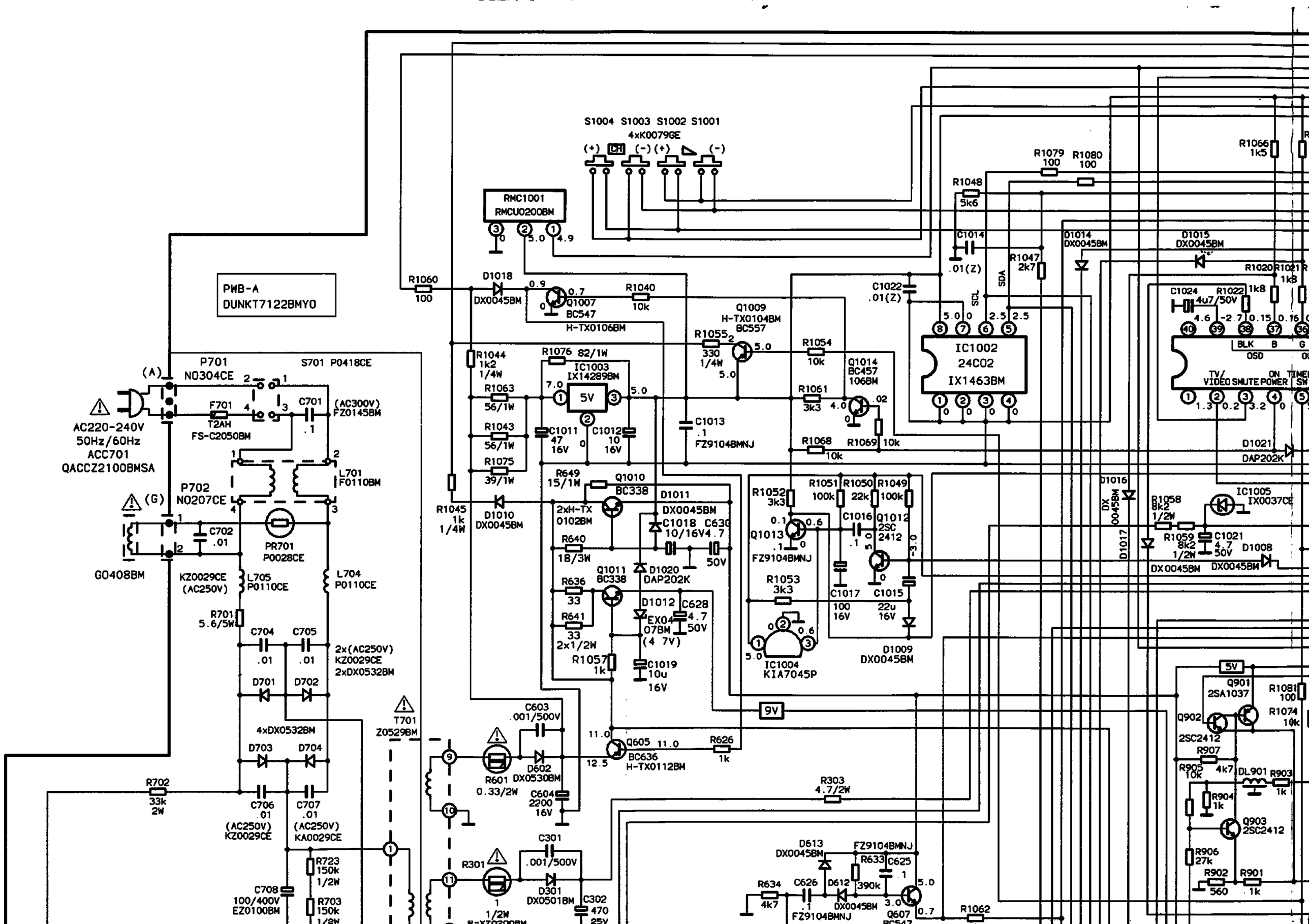
PWB-A
DUNKT7122BMYO
AC220-240V
50Hz/60Hz
ACC701
QACCZ2100BMSA
G0408BM
P701
N0304CE
S701 P0418CE
F701
T2AH
FS-C2050BM
C701
(AC300V)
FZ0145BM
P702
N0207CE
L701
F0110BM
PR701
P0028CE
C702
.01
KZ0029CE
(AC250V)
L705
P0110CE
L704
P0110CE
R701
5.6/5W
C704
C705
2x(AC250V)
KZ0029CE
2xDX0532BM
D701
D702
4xDX0532BM
D703
D704
R702
33k
2W
C706
.01
(AC250V)
KZ0029CE
C707
.01
(AC250V)
KA0029CE
C708
100/400V
EZ0100BM
R723
150k
1/2W
R703
150k
1/2W
T701
Z0529BM
S1004 S1003 S1002 S1001
4xK0079GE
RMC1001
RMCU0200BM
R1060
100
D1018
DX0045BM
Q1007
BC547
H-TX0106BM
R1040
10k
R1044
1k2
1/4W
R1076 82/1W
IC1003
IX14289BM
5V
R1063
56/1W
R1043
56/1W
R1075
39/1W
C1011
47
16V
C1012
10
16V
R649
15/1W
Q1010
BC338
2xH-TX
0102BM
R640
18/3W
D1010
DX0045BM
R1045
1k
1/4W
D1011
DX0045BM
C1018
10/16V
C630
4.7
50V
D1020
DAP202K
Q1011
BC338
R636
33
R641
33
2x1/2W
R1057
1k
D1012
EX0407BM
(4.7V)
C628
4.7
50V
C1019
10u
16V
Q1009
H-TX0104BM
BC557
R1055
330
1/4W
C1013
.1
FZ9104BMNJ
R1054
10k
Q1014
BC457
1068M
R1061
3k3
R1068
10k
R1069
10k
C1022
.01(Z)
C1014
.01(Z)
R1079
100
R1080
100
R1048
5k6
R1047
2k7
D1014
DX0045BM
SCL
SDA
IC1002
24C02
IX1463BM
R1052
3k3
Q1013
FZ9104BMNJ
R1053
3k3
IC1004
KIA7045P
R1051
100k
R1050
22k
R1049
100k
C1016
Q1012
2SC
2412
C1017
100
16V
C1015
22u
16V
D1009
DX0045BM
D1015
DX0045BM
R1066
1k5
R1020
R1021
1k8
C1024
4u7/50V
R1022
1k8
BLK
B
G
OSD
TV/
VIDEO
MUTE
POWER
ON TIMER
SW
D1021
DAP202K
D1016
DX0045BM
D1017
R1058
8k2
1/2W
IC1005
IX0037CE
R1059
8k2
1/2W
C1021
4.7
50V
D1008
DX0045BM
DX0045BM
9V
5V
Q901
2SA1037
R1081
100
R1074
10k
Q902
2SC2412
R907
R905
10k
4k7
DL901
R903
1k
R904
1k
Q903
2SC2412
R906
27k
R902
560
R901
1k
C603
.001/500V
R601
0.33/2W
D602
DX0530BM
C604
2200
16V
Q605
BC636
H-TX0112BM
R626
1k
R303
4.7/2W
R301
1
1/2W
C301
.001/500V
D301
DX0501BM
C302
470
25V
D613
DX0045BM
FZ9104BMNJ
R633
C625
.1
R634
4k7
C626
.1
FZ9104BMNJ
D612
DX0045BM
390k
Q607
BC547
R1062

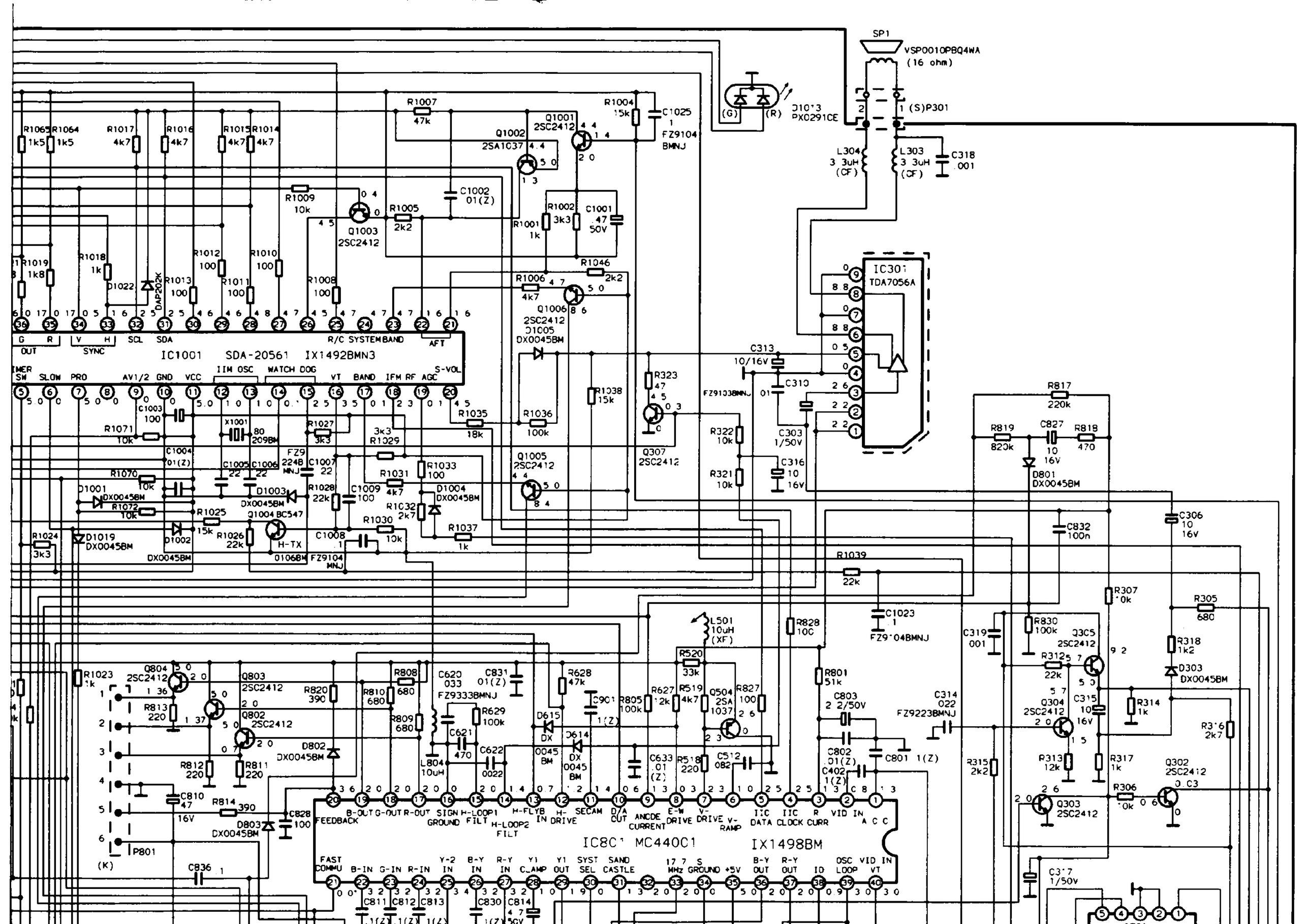
SP1
VSP0010PBQ4WA
(16 ohm)
D1013
PX0291CE
(G)
(R)
1 (S)P301
L304
3.3uH
(CF)
L303
3.3uH
(CF)
C318
.001
IC301
TDA7056A
IC1001 SDA-20561 IX1492BMN3
R/C SYSTEM BAND
AFT
SCL
SDA
OUT
SYNC
S-VOL
IC801 MC44001 IX1498BM
FEEDBACK
B-OUT G-OUT R-OUT
SIGN GROUND
H-LOOP1 FILT
H-LOOP2 FILT
H-FLYB IN
H-DRIVE
SECAM
D/A OUT
ANODE CURRENT
E-W DRIVE
V-DRIVE
V-RAMP
IIC DATA
IIC CLOCK
R CURR
VID IN
A C C
FAST COMMU
B-IN G-IN R-IN
Y-2 IN
B-Y IN
R-Y IN
Y1 C_AMP
Y1 OUT
SYST SEL
SAND CASTLE
17.7 MHz
S GROUND
+5V
B-Y OUT
R-Y OUT
ID
OSC LOOP
VID IN VT
P801
(K)
H-TX
Q1004 BC547
D1022 DAP202K
D1019 DX0045BM
D801 DX0045BM
D303 DX0045BM
D803 DX0045BM
D802 DX0045BM
D1003 DX0045BM
D1004 DX0045BM
D1002 DX0045BM
D1001 DX0045BM
D615 DX0045BM
D614 DX0045BM
Q1001 2SC2412
Q1002 2SA1037
Q1003 2SC2412
Q1006 2SC2412
Q1005 2SC2412
Q307 2SC2412
Q804 2SC2412
Q803 2SC2412
Q802 2SC2412
Q305 2SC2412
Q304 2SC2412
Q303 2SC2412
Q302 2SC2412
Q504 2SA1037
L501 10uH (XF)
L804 10uH
X1001 80 209BM
FZ9104BMNJ
FZ9223BMNJ
FZ9338BMNJ
FZ9333BMNJ
FZ9104 MNJ
FZ9 224B MNJ

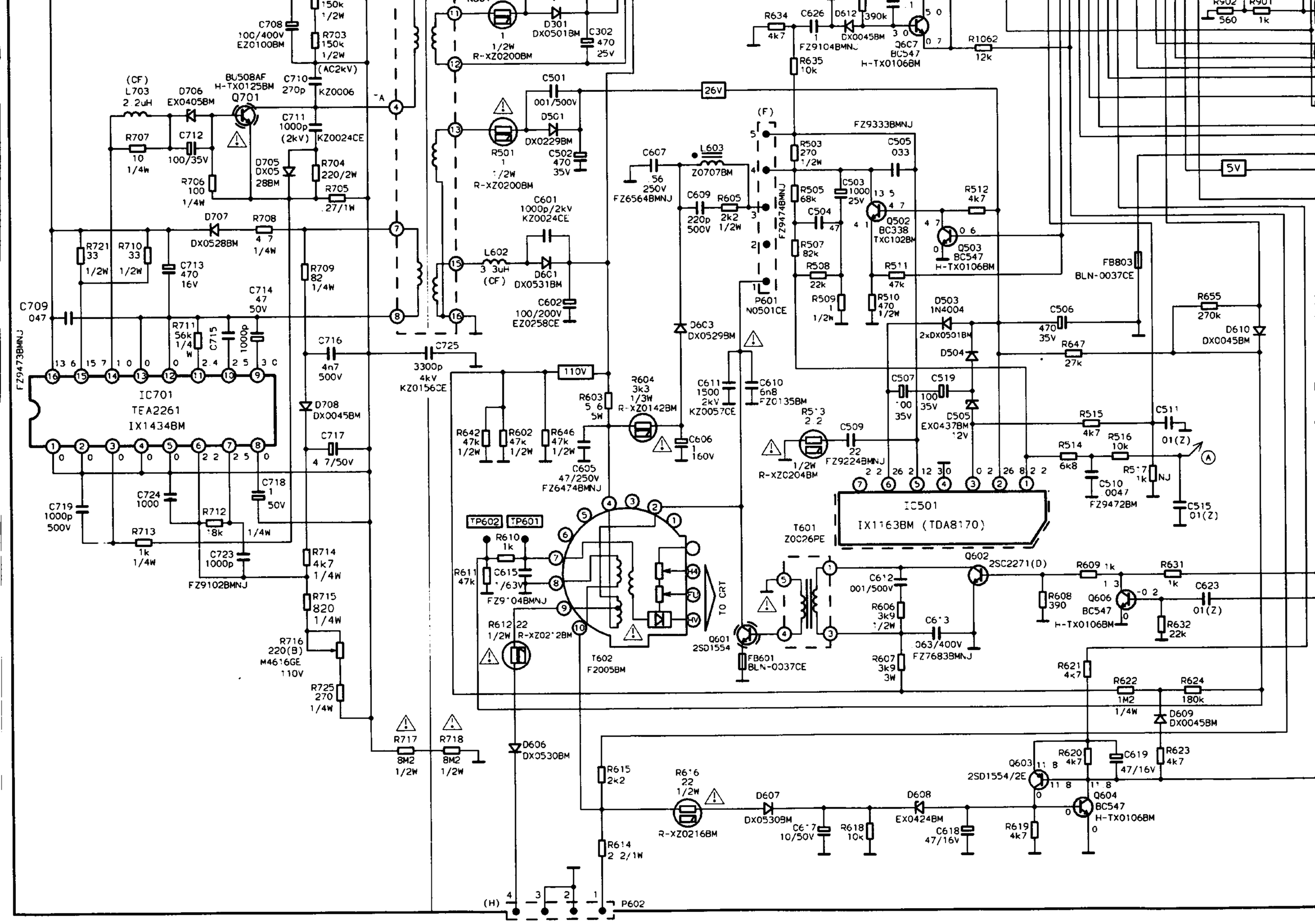
IC701
TEA2261
IX1434BM
IC501
IX1163BM (TDA8170)
TO CRT
26V
110V
5V
Q701
BU508AF
H-TX0125BM
Q6C7
BC547
H-TX0106BM
Q502
BC338
TXC102BM
Q503
BC547
H-TX0106BM
Q601
2SD1554
Q602
2SC2271(D)
Q606
BC547
H-TX0106BM
Q603
2SD1554/2E
Q604
BC547
H-TX0106BM
T601
Z0026PE
T602
F2005BM
P601
N0501CE
P602
TP602
TP601
FZ9333BMNJ
FZ9473BMNJ
FZ9474BMNJ
FZ6474BMNJ
FZ9102BMNJ
FZ9104BMNJ
FZ9472BM
FZ9224BMNJ
FZ7683BMNJ
FZ6564BMNJ
FZ0135BM
FZ9104BMNJ
FB803
BLN-0037CE
FB601
BLN-0037CE
M4616GE
110V
R-XZ0200BM
R-XZ0142BM
R-XZ0204BM
R-XZ0216BM
R-XZ0222BM
KZ0006
KZ0024CE
KZ0156CE
KZ0057CE
EZ0100BM
EZ0258CE
EX0405BM
EX0437BM
EX0424BM
DX0045BM
DX0501BM
DX0229BM
DX0531BM
DX0528BM
DX0529BM
DX0530BM
2xDX0501BM
L703
2.2uH
(CF)
L602
3.3uH
(CF)
Z0707BM
L603
C709
047
C708
100/400V
EZ0100BM
C710
270p
C711
1000p
(2kV)
KZ0024CE
C712
100/35V
C713
470
16V
C714
47
50V
C715
1000p
C716
4n7
500V
C717
4.7/50V
C718
1
50V
C719
1000p
500V
C723
1000p
C724
1000
C725
3300p
4kV
KZ0156CE
C501
001/500V
C502
470
35V
C601
1000p/2kV
KZ0024CE
C602
100/200V
EZ0258CE
C605
47/250V
FZ6474BMNJ
C606
1
160V
C607
.56
250V
FZ6564BMNJ
C609
220p
500V
C610
6n8
FZ0135BM
C611
1500
2kV
KZ0057CE
C612
001/500V
C615
1/63V
FZ9104BMNJ
C619
47/16V
C623
01(Z)
C626
FZ9104BMNJ
C6C3
.063/400V
FZ7683BMNJ
C6C7
10/50V
C618
47/16V
C501
001/500V
C502
470
35V
C503
1000
25V
C504
47
C505
033
C506
470
35V
C507
100
35V
C509
22
FZ9224BMNJ
C510
0047
FZ9472BM
C511
01(Z)
C515
01(Z)
D301
DX0501BM
D501
DX0229BM
D601
DX0531BM
D603
DX0529BM
D605
D606
DX0530BM
D607
DX0530BM
D608
EX0424BM
D609
DX0045BM
D610
DX0045BM
D612
DX0045BM
D503
1N4004
D504
D505
EX0437BM
D705
DX0528BM
D707
DX0528BM
D708
DX0045BM
R501
R-XZ0200BM
R503
270
1/2W
R504
68k
R505
68k
R506
100
1/4W
R507
82k
R508
22k
R509
1
1/2W
R510
470
1/2W
R511
47k
R512
4k7
R514
6k8
R515
4k7
R516
10k
R517
1k
R601
R602
47k
1/2W
R603
5.6
5W
R604
3k3
1/3W
R605
2k2
1/2W
R606
3k9
1/2W
R607
3k9
3W
R608
390
R609
1k
R610
1k
R611
47k
R612
22
1/2W
R615
2k2
R616
22
1/2W
R614
2.2/1W
R617
2.2
1/2W
R618
10k
R619
4k7
R620
4k7
R621
4k7
R622
1M2
1/4W
R623
4k7
R624
180k
R631
1k
R632
22k
R633
1k
R634
4k7
R635
10k
R642
47k
1/2W
R646
47k
1/2W
R647
27k
R655
270k
R702
150k
1/2W
R703
150k
1/2W
R704
220/2W
R705
.27/1W
R706
100
1/4W
R707
10
1/4W
R708
4.7
1/4W
R709
82
1/4W
R710
33
1/2W
R711
56k
1/4W
R712
18k
1/4W
R713
1k
1/4W
R714
4k7
1/4W
R715
820
1/4W
R716
220(B)
110V
R717
8M2
1/2W
R718
8M2
1/2W
R721
33
1/2W
R725
270
1/4W
R1062
12k
R902
560
R901
1k
P601
P602
(F)
(H)
(CF)
-A
A

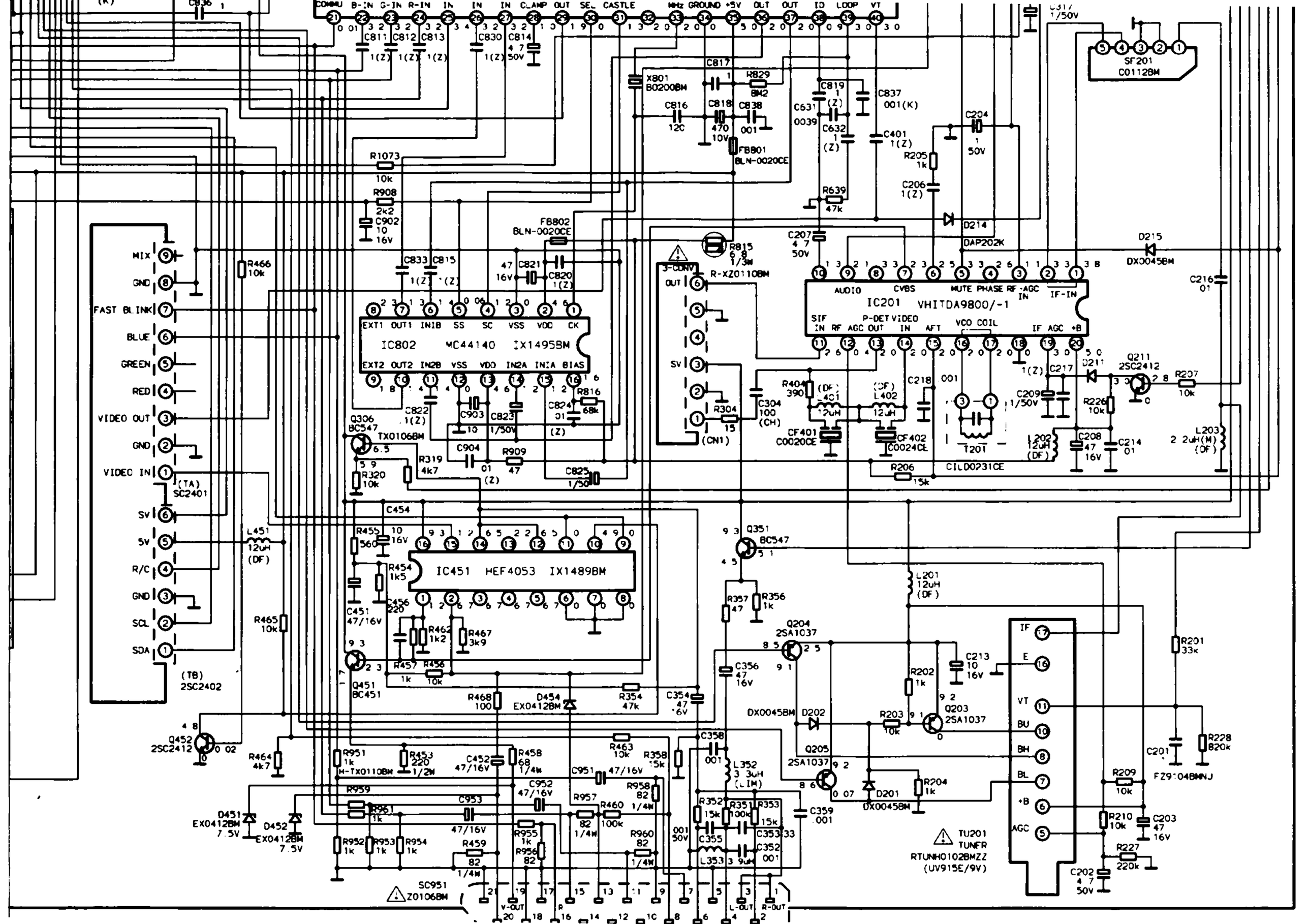
COMMU
B-IN
G-IN
R-IN
IN
IN
IN
CLAMP
OUT
SEL
CASTLE
MHz
GROUND
+5V
OUT
OUT
ID
LOOP
VT
C811
C812
C813
C830
C814
C836
C317
1/50V
SF201
C0112BM
X801
B0200BM
C817
R829
8M2
C816
12C
C818
470
10V
C838
001
FB801
BLN-0020CE
C819
C631
0039
C632
C837
001(K)
C401
1(Z)
C204
50V
R205
1k
C206
1(Z)
R639
47k
D214
DAP202K
D215
DX0045BM
R1073
10k
R908
2k2
C902
10
16V
FB802
BLN-0020CE
R815
6.8
1/3W
C207
4.7
50V
R466
10k
C833
C815
C821
47
16V
C820
1(Z)
3-CONV
R-XZ0110BM
OUT
SV
(CN1)
IC201
VHITDA9800/-1
AUDIO
CVBS
MUTE
PHASE
RF-AGC IN
IF-IN
SIF IN
RF AGC OUT
P-DET VIDEO IN
AFT
VCO COIL
IF AGC
+B
C216
01
MIX
GND
FAST BLINK
BLUE
GREEN
RED
VIDEO OUT
GND
VIDEO IN
(TA)
SC2401
SV
5V
R/C
GND
SCL
SDA
(TB)
2SC2402
IC802
MC44140
IX1495BM
EXT1
OUT1
INIB
SS
SC
VSS
VDD
CK
EXT2
OUT2
IN2B
VSS
VDD
IN2A
INIA
BIAS
C822
1(Z)
C903
C823
1/50V
R816
68k
C824
01
(Z)
Q306
BC547
TX0106BM
R319
4k7
R320
10k
C904
01
(Z)
R909
47
C825
1/50
R404
390
(DF)
L401
12uH
(DF)
L402
12uH
CF401
C0020CE
CF402
C0024CE
C304
100
(CH)
R304
15
C218
001
T201
CILD0231CE
C217
C209
1/50V
D211
Q211
2SC2412
R207
10k
R226
10k
L202
12uH
(DF)
C208
47
16V
C214
01
L203
2.2uH(M)
(DF)
R206
15k
C454
R455
560
10
16V
R454
1k5
IC451
HEF4053
IX1489BM
C451
47/16V
C456
220
R462
1k2
R467
3k9
R457
1k
R456
10k
Q451
BC451
L451
12uH
(DF)
R465
10k
R468
100
D454
EX0412BM
R354
47k
C354
47
16V
Q351
BC547
R357
47
R356
1k
L201
12uH
(DF)
Q204
2SA1037
C356
47
16V
R202
1k
C213
10
16V
R201
33k
DX0045BM
D202
R203
10k
Q203
2SA1037
Q205
2SA1037
D201
DX0045BM
R204
1k
C201
R228
820k
FZ9104BMNJ
Q452
2SC2412
R464
4k7
R951
1k
H-TX0110BM
R453
220
1/2W
C452
47/16V
R458
68
1/4W
R463
10k
R358
15k
C358
001
L352
3.3uH
(LIM)
C951
47/16V
C952
47/16V
R959
R961
1k
C953
47/16V
R957
82
1/4W
R460
100k
R958
82
1/4W
R352
15k
R351
100k
R353
15k
C355
C353
33
C352
001
L353
3.9uH
C359
.001
001
50V
D451
EX0412BM
7.5V
D452
EX0412BM
7.5V
R952
1k
R953
1k
R954
1k
R459
82
1/4W
R955
1k
R956
82
R960
82
1/4W
R209
10k
R210
10k
C203
47
16V
R227
220k
C202
4.7
50V
SC951
Z0106BM
TU201
TUNER
RTUNH0102BMZZ
(UV915E/9V)
IF
E
VT
BU
BH
BL
+B
AGC
V-OUT
R
L-OUT
R-OUT